DIENES

DF50-150 SHEAR CUT HOLDER PARTS LIST

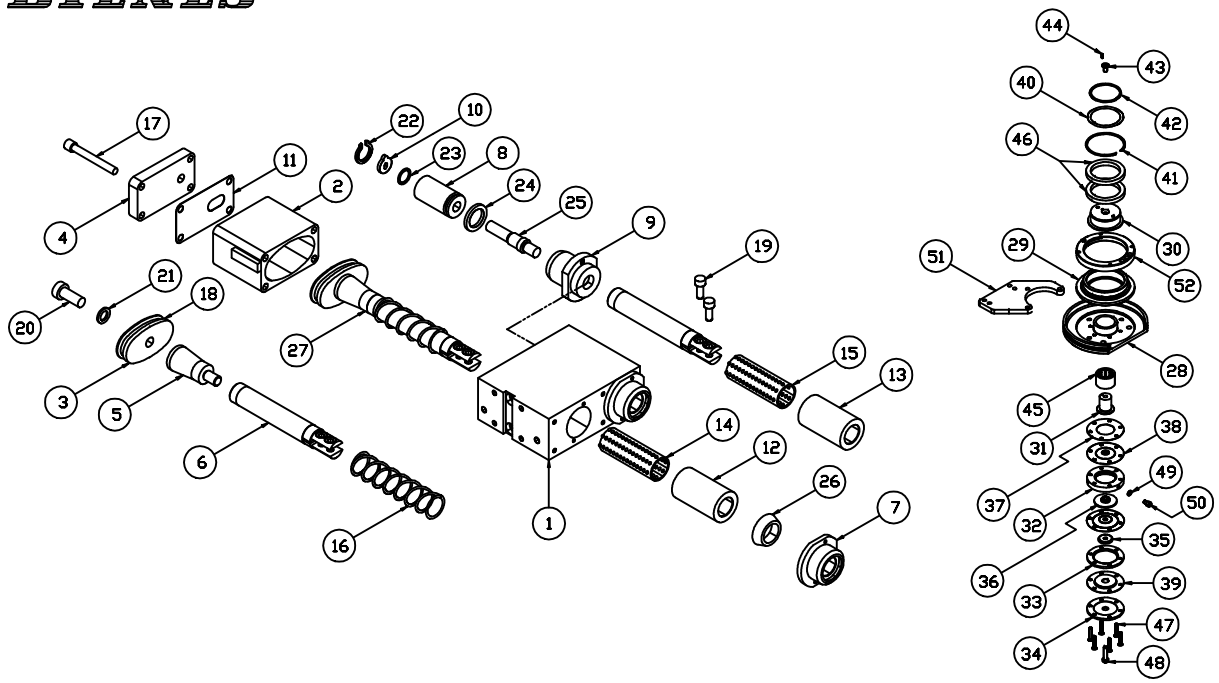

DIENES CORP PART NUMBERS

ITEM #	DESCRIPTION	DIENES PART #	ITEM #	DESCRIPTION	DIENES PART #	ITEM #	DESCRIPTION	DIENES PART #
1	HOLDER BODY	245C130529010	19	SOCKETHEAD CAP SCREW	651246	37	SPACER	245C070545020
2	PRESSURE CYLINDER	245C080526010	20	SOCKETHEAD CAP SCREW	617340	38	DIAPHRAGM	022137
3	PISTON	650770	21	GASKET	650777	39	CIRCULAR SPRING	263C070034010
4	CYLINDER COVER	245C080525010	22	RETAINING RING	022129	40	WASHER	021583
5	SCREW	234B030205010	23	DISC	234E030036030	41	RETAINING RING	021525
6	GUIDE SHAFT	245C020534010	24	O-RING	650779	42	RETAINING RING	22070
7	RETAINING SLEEVE	021637	25	THREADED PIN	234B020204010	43	SOCKET HEAD COUNTERSUNK SCREW	651240
8	NUT	245C030530010	26	DIRT WIPER	650780	44	GROOVED PIN	651241
9	PROTECTIVE CAP	245C050533010	27	GUIDE SHAFT ASSEMBLY	N.A.	45	BRASS BEARING CAGE	651242
10	NOSE WASHER	234E020061010	28	LOWER GUARD HOUSING	245D070A01001	46	BALL BEARING	023008
11	GASKET	245C080528010	29	KNIFE CARRIER	245C100535020	47	SOCKET HEAD COUNTERSUNK SCREW	614104
12	BEARING BUSHING	650771	30	BUSHING	245C060537010	48	LOW HEAD SOCKET HEAD CAP SCREW	651250
13	BEARING BUSHING	650772	31	AXLE	245C030546030	49	GASKET	651243
14	BRASS BEARING CAGE	650773	32	INTERMEDIATE RING	245C070539030	50	SOCKET CAP SCREW	613558
15	BRASS BEARING CAGE	650774	33	INNER COVER	245C070541010	51	INTERMEDIATE PLATE	245C130703010
16	SPRING	650775	34	OUTER COVER	245C070540010	52	RING NUT	021638
17	SOCKET HEAD CAP SCREW	613646	35	INTERMEDIATE PLATE	245C030548010			
18	SEAL	650776	36	STEPPED INTERMEDIATE PLATE	245C040547040			

Dwg. 3135-002

DIENES-WERKE PART NUMBERS

ITEM #	DESCRIPTION	DIENES PART #	ITEM #	DESCRIPTION	DIENES PART #	ITEM #	DESCRIPTION	DIENES PART #
1	HOLDER BODY	245C130529010	19	SOCKETHEAD CAP SCREW	0F06912005006	37	SPACER	245C070545020
2	PRESSURE CYLINDER	245C080526010	20	SOCKETHEAD CAP SCREW	0D06912010006	38	DIAPHRAGM	245C070544010
3	PISTON	245C070527010	21	GASKET	0D07603010001	39	CIRCULAR SPRING	263C070034010
4	CYLINDER COVER	245C080525010	22	RETAINING RING	0D00472016001	40	WASHER	234E000031030
5	SCREW	234B030205010	23	DISC	234E030036030	41	RETAINING RING	217B070050010
6	GUIDE SHAFT	245C020534010	24	O-RING	0FORING019002	42	RETAINING RING	0FSPRING050001
7	RETAINING SLEEVE	245C060532020	25	THREADED PIN	234B020204010	43	SOCKET HEAD COUNTERSUNK SCREW	0D07991006003
8	NUT	245C030530010	26	DIRT WIPER	0FSCHMU020001	44	GROOVED PIN	0D01474002002
9	PROTECTIVE CAP	245C050533010	27	GUIDE SHAFT ASSEMBLY	N.A.	45	BRASS BEARING CAGE	0FKUGBU020005
10	NOSE WASHER	234E020061010	28	LOWER GUARD HOUSING	245D070A01001	46	BALL BEARING	0FKULAG050001
11	GASKET	245C080528010	29	KNIFE CARRIER	245C100535020	47	SOCKET HEAD COUNTERSUNK SCREW	0D07991004003
12	BEARING BUSHING	0FKUGBU020007	30	BUSHING	245C060537010	48	LOW HEAD SOCKET HEAD CAP SCREW	0D06912006013
13	BEARING BUSHING	0FKUGBU020008	31	AXLE	245C030546030	49	GASKET	0FPNZUB005003
14	BRASS BEARING CAGE	0FKUGBU020009	32	INTERMEDIATE RING	245C070539030	50	SOCKET CAP SCREW	0D00912005014
15	BRASS BEARING CAGE	0FKUGBU020004	33	INNER COVER	245C070541010	51	INTERMEDIATE PLATE	245C130703010
16	SPRING	0FFEDER031001	34	OUTER COVER	245C070540010	52	RING NUT	411343
17	SOCKET HEAD CAP SCREW	0D00912006012	35	INTERMEDIATE PLATE	245C030548010			
18	SEAL	0FDICHT000001	36	STEPPED INTERMEDIATE PLATE	245C040547040			