(9N) Single Level Bill of Material - P3137-0001 HLDR,DS5-150 LED,LH,LONG LIFE

User	Component	Qty per Stk UM	Description
0010	15038393	1.00 EA	HLDR,DS5-150,SENSO,CSL-3,Z1
0020	021563-1A	1.00 EA	KNF,DI,150X080X2.5,DB,P,D2
0030	650931	1.00 EA	VALVE,SUPPLY FLOW CONTROL M5
0040	651030	1.00 EA	CONN,EL,MINI M5-4MM FS

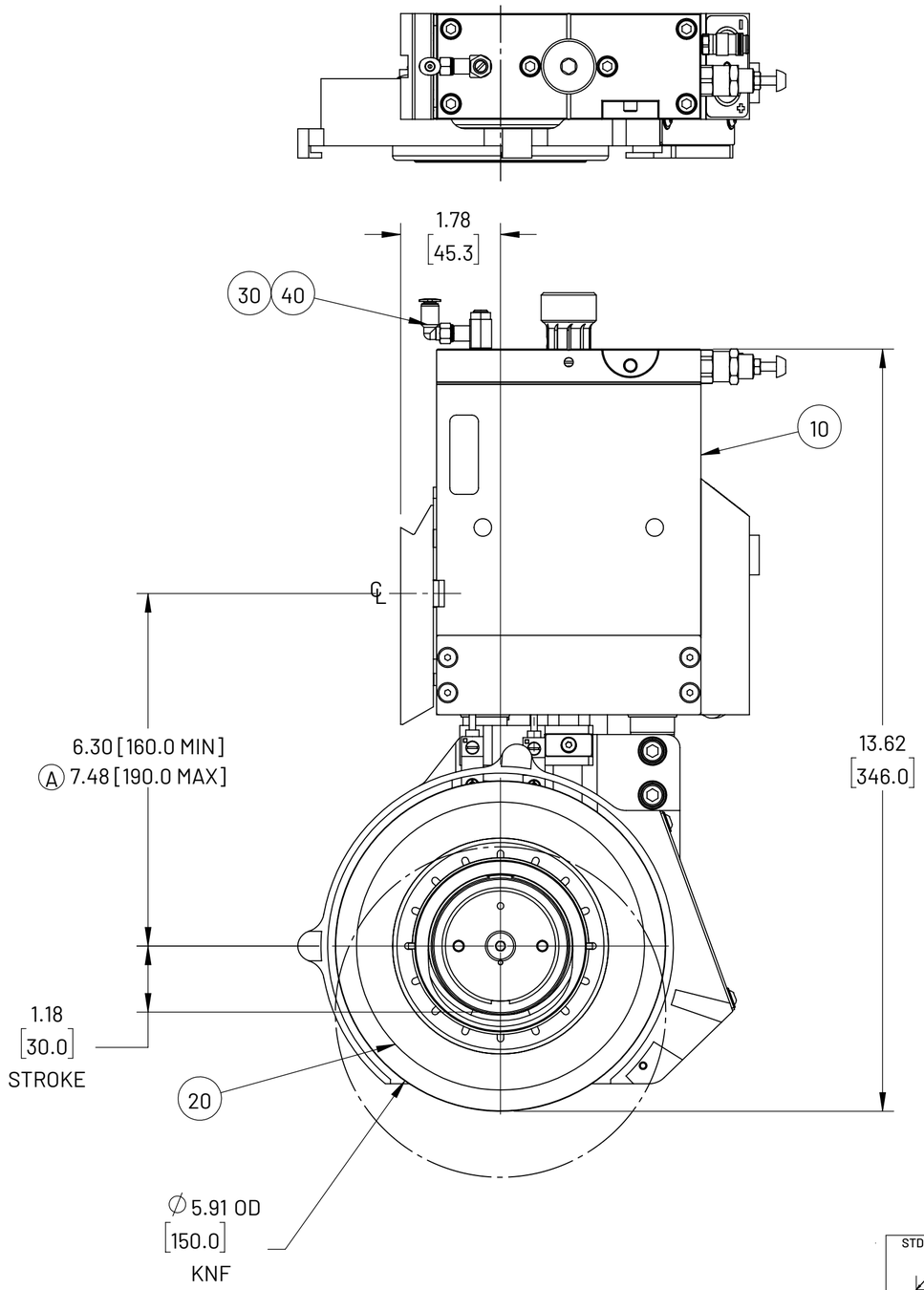

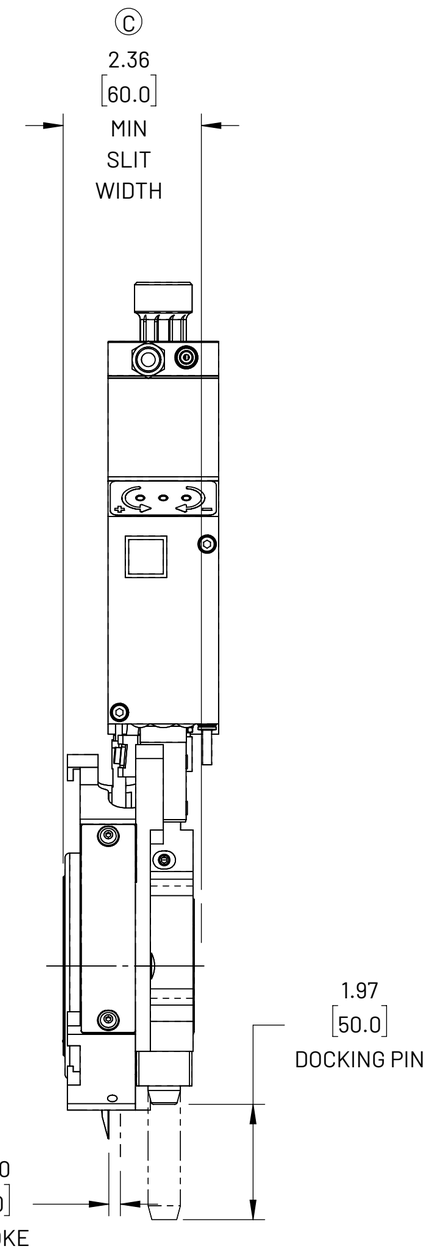

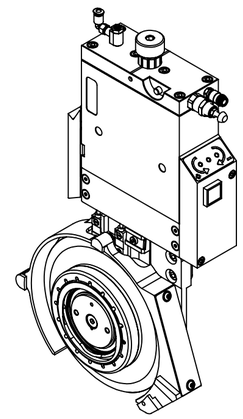

NOTES:
1. MATERIAL: SEE BILL OF MATERIAL.
2. THIS HOLDER IS STANDARD CONFIGURATION.
3. USE FIXTURE TO ENSURE HOLDER IS ASSEMBLED SQUARE, IF APPLICABLE.
4. TEST HOLDER FOR STROKE AND PNEUMATIC LEAKS.
5. [ ] METRIC FOR REFERENCE ONLY.
6. APPROX. WEIGHT: 14.19 lbs

REV.	ECN#	DESCRIPTION	DATE
C	XXXX	UPDATED MIN SLIT WIDTH TO 60 MM	7/16/2026
B	XXXX	UPDATED HOLDER NAME	7/2/2026
A	XXXX	UPDATED STROKE & DIM	6/9/2026
-	XXXX	INITIAL RELEASE	RELSD

REVISIONS

STD. CORNER RADIUS +0.015 -0.015 / -0.005 -0.015

THIRD ANGLE PROJECTION

Tolerances Unless Noted:
.XXXX ±.0005 Fract. ±.015
.XXX ±.005 Angles ±1/2°
.XX ±.010 Finish: 125

THIS DRAWING IS PROPERTY OF DIENES CORPORATION, IT MAY CONTAIN PROPRIETARY INFROMATION. DO NOT USE FOR PURPOSES OTHER THAN THOSE INTENDED

DIENES

Drawn by	TCK	10/9/2025
Checked by	ARC	10/9/2025
Last changed	RELSD	
Printed		

Similar to | Replacement for | Replaced by

Unit of Measure: Inches | Scale: 1:2 | Weight lbs.: 14.19

Material

Description: HLDR,DS5-150 LED,LH,LONG LIFE

Drawing number: P3137-0001

Revision: C

Part number (If different than drawing number)

Sheet Size: C

Sheet number: 1/2